SERIES 550-560 GX TROLLEY (Page 24)

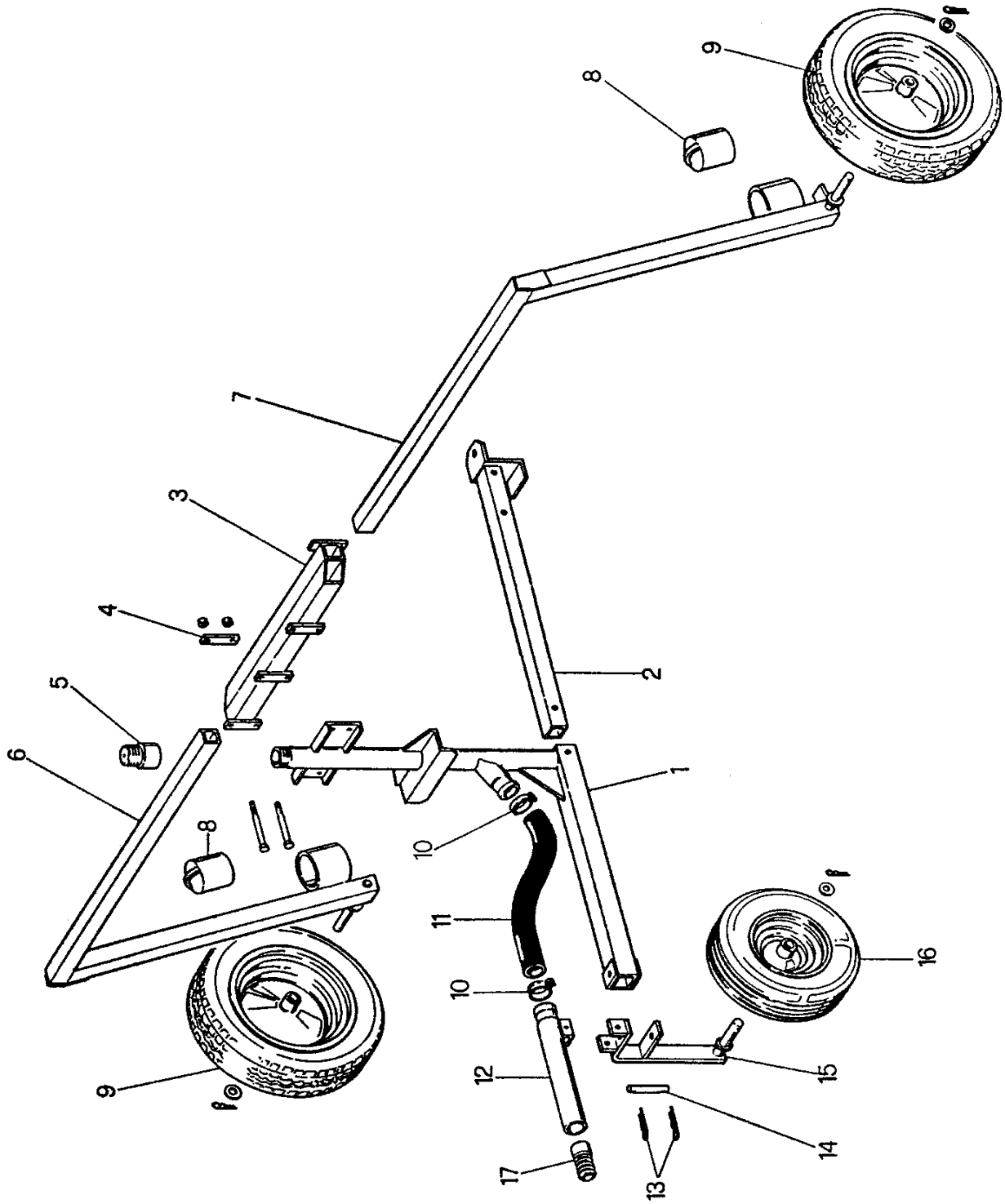

SERIES 550-560 GX TROLLEY

POS.	Page	Description	N.Pieces	Item Number	Notes
1	24	Trolley Body	1	55010175	
2	24	Drawbar	1	55010172	
3	24	Head	1	55010173	
4	24	Leg Bracket	2	55010171	
5	24	Bushing 2"1/2 - 2"F	1	5500132	Ø PE 75
6	24	Left Lag	1	55010176	
7	24	Right Leg	1	55010177	
8	24	Weight 560	2	BILLETTE	.2 meters
9	24	Wheel 4.00x10" Trailer	2	5500129	
10	24	Clamp 67-73	2	5500121	
11	24	Rubber Hose 10 60x70	1	5500112	.75 meters
12	24	Connector PE-Trolley	1	55010174	
13	24	R-Clip Ø 6x40	2	5800205	
14	24	Pin	1	55010179	
15	24	Wheel support	1	55010178	
16	24	Wheel 15.600x6" 4 ply or 4.00x6"	1	5500128	pn
17	24	Barbed Nipple PE	1	5500033	Ø PE
1		\			
2		\			
3		\			
4		\			
6	24	Trolley Bare 550-560	1	5501017	
7		/			
12		/			
14		/			
15		/			
1÷17	24	Trolley Complete	1	CARR550.1	